Aaryan Kushawaha
Sec :- “A”

Expression From the K – Map :-

A = WX + WYZ

B = X’Y’ + X’Z’ + XYZ

C = Y’Z + YZ’

D = Z’
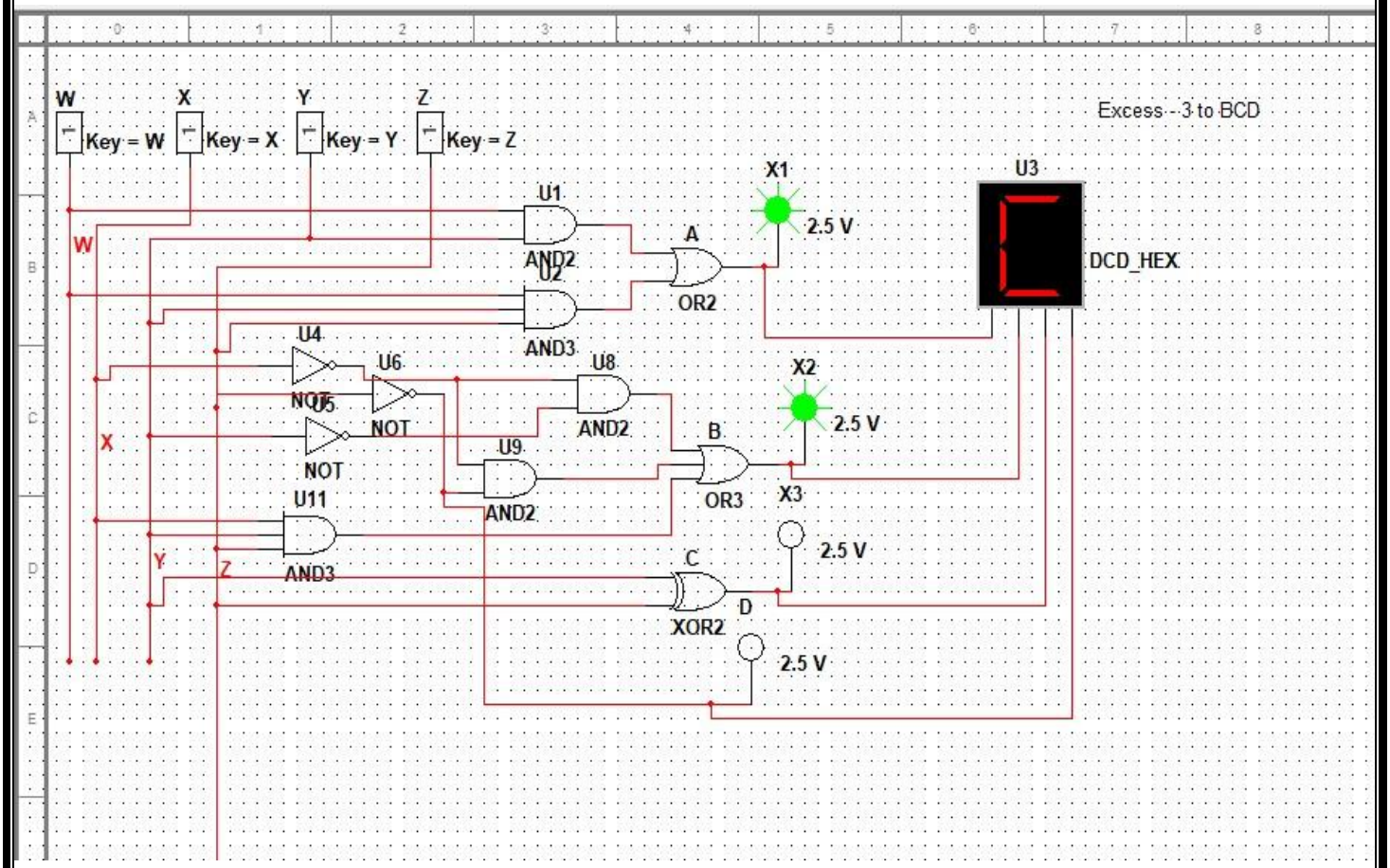
:- Logical Diagram for Input in Excess -3 & Output in BCD Code